DRG No BL/D6342/05 INST
USED ON

THIRD ANGLE PROJECTION

REMOVE ALL SHARP EDGES UNLESS SPECIFIED

DO NOT SCALE – ASK

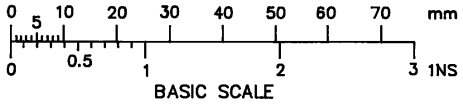

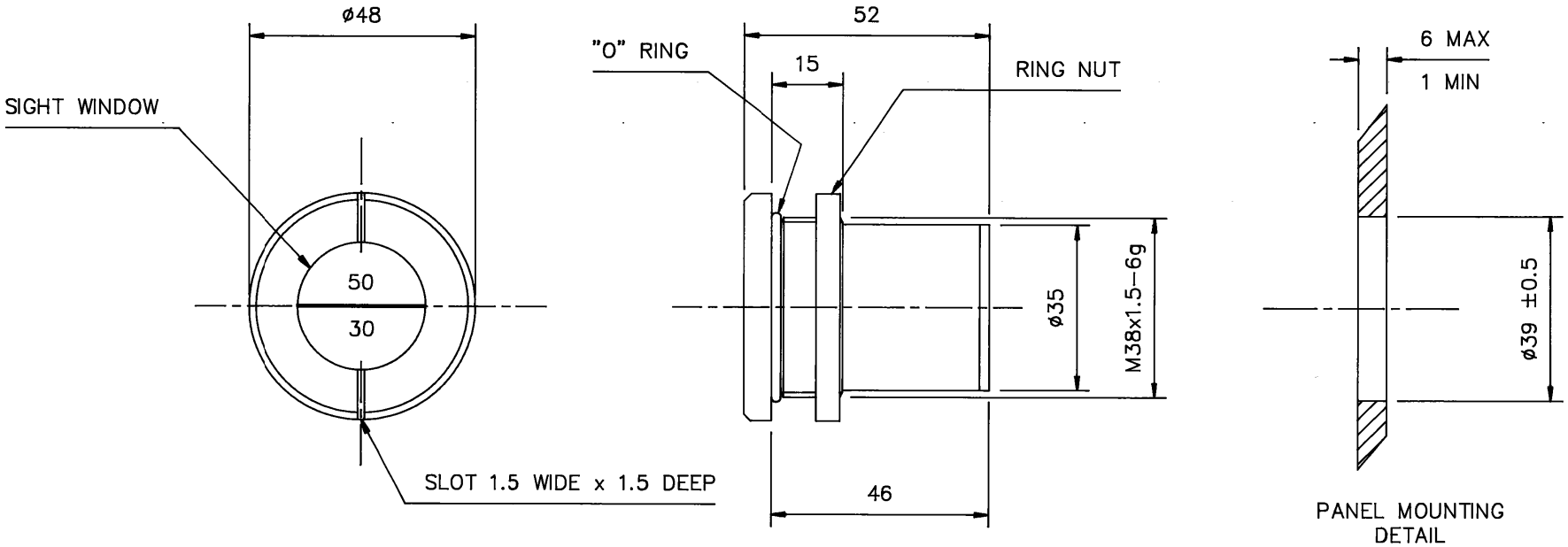

DESICCANT CONTENT 10g SILICA GEL

NOTE: ENSURE THAT THE RING NUT IS LOOSELY FITTED AND NOT TIGHTENED AGAINST THE 'O' RING BEFORE PACKAGING.

CHANGE	MOD No	ISSUE	DATE
NOTE ADDED	5574	3	16/12/99
SLOT CHANGED	5409	2	25/2/99
		1	11/12/93

MATERIAL	PROTECTIVE FINISH	TOLERANCES	CUSTOMER	CUSTOMER'S REF	DRAWN	CHECKED
BLACK POLYCARBONATE	NATURAL	±0.5	BROWNELL Ltd. LONDON NW10		PD	
EST. WT.		DIMENSIONS IN in/mm: mm	TITLE	DRAWING NUMBER		
		SURFACE ROUGHNESS	PANEL MOUNTED DESICCATOR	BL/D6342/05 INST		
		SCALE (ORIGINAL): 1:1				