DRG No
BL/D12422/01-10

USED ON -----

REMOVE ALL SHARP EDGES UNLESS SPECIFIED

THIRD ANGLE PROJECTION

DO NOT SCALE - ASK

THIS DRAWING IS THE PROPERTY OF BROWNELL LTD,AND MAY NOT BE COPIED OR REPRODUCED WITHOUT THEIR PRIOR WRITTEN PERMISSION

VARIANT	CRACK (PSI)	RE-SEAL (PSID MIN)
BL/D12422/01	0.5 (+/-0.2)	0.1
BL/D12422/02	1.0 (+/-0.15)	0.75
BL/D12422/03	1.25 (+/-0.15)	1.0
BL/D12422/04	1.5 (+/-0.15)	1.0
BL/D12422/05	2.0 (+/-0.15)	1.5
BL/D12422/06	2.5 (+/-0.25)	2.0
BL/D12422/07	3.0 (+/-0.5)	2.0
BL/D12422/08	3.5 (+/-0.5)	3.0
BL/D12422/09	5.75 (+/-0.75)	5.0
BL/D12422/10	7.0 (+/-1.0)	5.5

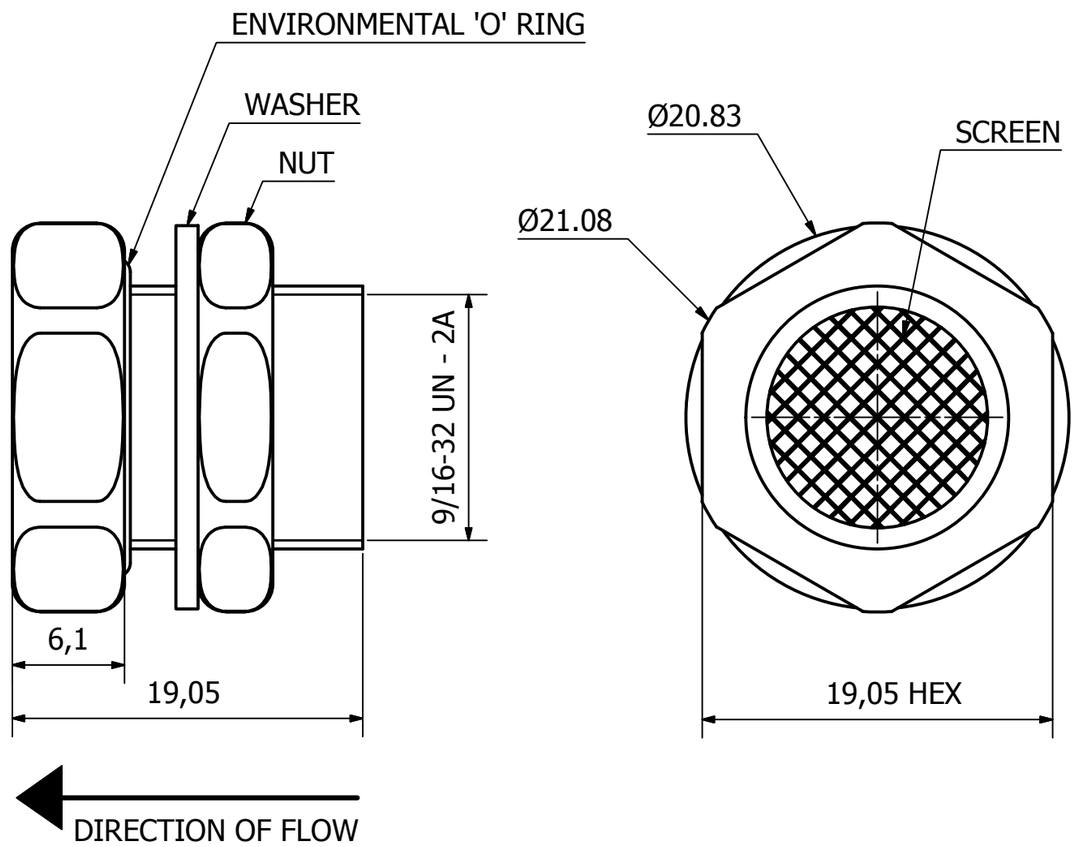

MATERIALS

HOUSING, STEM AND NUT: ALUMINIUM ALLOY

SPRING, RETAINING RING AND SCREEN: STAINLESS STEEL

ENVIRONMENTAL 'O' RING AND 'O' RING SEAL: BUNA-N

WASHER: ACETAL

FINISH: ALUMINIUM ALLOYS BLACK ANODISED IAW MIL-A-8625, TYPE II, CLASS 2

OPERATING TEMPERATURE RANGE: -54˚C TO 82˚C

CHANGE	MOD No	ISSUE	DATE
ORIGINAL		1	21/11/16

MATERIAL	PROTECTIVE FINISH	UNLESS OTHERWISE STATED	ANGULAR DIMS	LINEAR DIMS
SEE NOTES	SEE NOTES		± 0.5°	0 = ± 0.5 0.0 = ± 0.25 0.00 = ± 0.05
EST. WT.		SURFACE ROUGHNESS		
		DIMENSIONS IN in/mm	mm	
		SCALE (ORIGINAL)	NTS	

BROWNELL Ltd. LONDON NW10 7XF

TITLE
PRESSURE RELIEF VALVE

RED DOT=ORIGINAL
BLACK DOT=COPY

DRAWN JP

CHECKED NP

DRAWING NUMBER
BL/D12422/01-10